

MADISON TRACK ARM

77651

The Madison upholstery collection is the perfect mix of updated classic style and proportions. Equipped with espresso wood legs, seat and back cushions with extra down filled for ultimate comfort and a slightly relaxed look, Madison is a complete stationary collection with endless configuration potential.

PALLISER

MADISON TRACK ARM

77651

Note: Icon images are for illustrative purposes only and may not be an exact representation of the product. Please refer to the product photography for the most accurate representation.
Left-hand Facing (LHF): Refers to the arm or bumper being on the left side of the piece when you are facing it.
Right-hand Facing (RHF): Refers to the arm or bumper being on the right side of the piece when you are facing it.
Inside Arm (IA): Refers to the distance between the arms.

STANDALONE PIECES



01 Sofa

88 x 40 x 33"
224 x 102 x 84 cm
IA: 75" / 191 cm



02 Chair

38 x 40 x 33"
97 x 102 x 84 cm
IA: 25" / 64 cm



03 Loveseat

63 x 40 x 33"
161 x 102 x 84 cm
IA: 50" / 127 cm



04 Ottoman

32 x 22 x 16"
82 x 56 x 41 cm



33 Swivel Chair

38 x 40 x 33"
97 x 102 x 84 cm
IA: 25" / 64 cm



4T Storage Ottoman with Table

46 x 36 x 16"
117 x 92 x 41 cm



63 Storage Ottoman

46 x 36 x 16"
117 x 92 x 41 cm



81 Finished Armless Chair

32 x 40 x 33"
82 x 102 x 84 cm
IA: 32" / 82 cm



91 Apartment Sofa

77 x 40 x 33"
196 x 102 x 84 cm
IA: 64" / 163 cm



A1 Grande Sofa

109 x 40 x 33"
277 x 102 x 84 cm
IA: 96" / 244 cm



D1 2 Seat Sofa

88 x 40 x 33"
224 x 102 x 84 cm
IA: 75" / 191 cm



G1 Finished Armless Swivel Chair

32 x 40 x 33"
82 x 102 x 84 cm

*Select pieces from this collection are available in pattern-matched accent covers. Pattern matching ensures the pattern is consistent throughout the piece and matches at seams, and over arms and backs, creating a continuous pattern.
Dimensions shown as Width x Depth x Height. Dimensions are correct at the time of printing and are subject to change without notice. Actual measurements for each item may vary. Please allow up to a +/- 1 inch or 3 centimeter difference.

PALLISER

MADISON TRACK ARM

77651

Note: Icon images are for illustrative purposes only and may not be an exact representation of the product. Please refer to the product photography for the most accurate representation.
Left-hand Facing (LHF): Refers to the arm or bumper being on the left side of the piece when you are facing it.
Right-hand Facing (RHF): Refers to the arm or bumper being on the right side of the piece when you are facing it.
Inside Arm (IA): Refers to the distance between the arms.

SECTIONAL PIECES



10 Armless Chair

32 x 40 x 33"
82 x 102 x 84 cm



11 Square Corner

39 x 39 x 33"
100 x 100 x 84 cm



15 Right-Hand Facing Chaise

39 x 64 x 33"
98 x 163 x 84 cm
IA: 32" / 82 cm



16 Left-Hand Facing Chaise

39 x 64 x 33"
98 x 163 x 84 cm
IA: 32" / 82 cm



19 Right-Hand Facing Bumper

60 x 40 x 33"
153 x 102 x 84 cm



20 Left-Hand Facing Bumper

60 x 40 x 33"
153 x 102 x 84 cm



39 Left-Hand Facing Sofa Split

110 x 40 x 33"
279 x 102 x 84 cm



40 Right-Hand Facing Sofa Split

110 x 40 x 33"
279 x 102 x 84 cm



88 Left-Hand Facing Chair

39 x 40 x 33"
98 x 102 x 84 cm



89 Right-Hand Facing Chair

39 x 40 x 33"
98 x 102 x 84 cm



90 Armless Apartment Sofa

64 x 40 x 33"
163 x 102 x 84 cm
IA: 64" / 163 cm



92 Left-Hand Facing Apartment Sofa

71 x 40 x 33"
180 x 102 x 84 cm
IA: 64" / 163 cm



93 Right-Hand Facing Apartment Sofa

71 x 40 x 33"
180 x 102 x 84 cm
IA: 64" / 163 cm



9W Curved Corner

48 x 48 x 33"
122 x 122 x 84 cm
IA: 40" / 102 cm

*Select pieces from this collection are available in pattern-matched accent covers. Pattern matching ensures the pattern is consistent throughout the piece and matches at seams, and over arms and backs, creating a continuous pattern.
Dimensions shown as Width x Depth x Height. Dimensions are correct at the time of printing and are subject to change without notice. Actual measurements for each item may vary. Please allow up to a +/- 1 inch or 3 centimeter difference.

PALLISER

MADISON TRACK ARM

77651

Note: Icon images are for illustrative purposes only and may not be an exact representation of the product. Please refer to the product photography for the most accurate representation.
Left-hand Facing (LHF): Refers to the arm or bumper being on the left side of the piece when you are facing it.
Right-hand Facing (RHF): Refers to the arm or bumper being on the right side of the piece when you are facing it.
Inside Arm (IA): Refers to the distance between the arms.

POPULAR CONFIGURATIONS



3-Seat Chaise Sectional

92/15
109 x 64"
277 x 163 cm



7-Seat L-Sectional

92/90/40
175 x 110"
445 x 280 cm

*Select pieces from this collection are available in pattern-matched accent covers. Pattern matching ensures the pattern is consistent throughout the piece and matches at seams, and over arms and backs, creating a continuous pattern.
Dimensions shown as Width x Depth x Height. Dimensions are correct at the time of printing and are subject to change without notice. Actual measurements for each item may vary. Please allow up to a +/- 1 inch or 3 centimeter difference.

PALLISER

MADISON TRACK ARM

77651

KEY FEATURES

- Pair a track arm, roll arm, or a modern English arm with a decorative espresso wood foot for a classic look. Ample selection within this series offers a wide range of choices as standalone or sectional configurations.

FRAME

- All Palliser frames are constructed from engineered wood products, hardwood or softwood; joints are pinned and glued for uniformity and strength.

CHOOSE YOUR ACESSORIES

- Premium
- Premium Plush
- Espresso

CHOOSE YOUR LEG OPTION

- Castors (Adds 1 inch to overall height)
- Espresso Wood Leg
- Rotables

CHOOSE YOUR COVER

- Fabric
- Leather
- Leather Alternative
- Leather Match
- Select pieces avail in Accent Fabrics

SEATING

- Seat Suspension: Heavy gauge sinuous springs, engineered to provide premium comfort and endurance.

*Select pieces from this collection are available in pattern-matched accent covers. Pattern matching ensures the pattern is consistent throughout the piece and matches at seams, and over arms and backs, creating a continuous pattern.
Dimensions shown as Width x Depth x Height. Dimensions are correct at the time of printing and are subject to change without notice. Actual measurements for each item may vary. Please allow up to a +/- 1 inch or 3 centimeter difference.

PALLISER

MADISON TRACK ARM

77651

DIMENSIONS

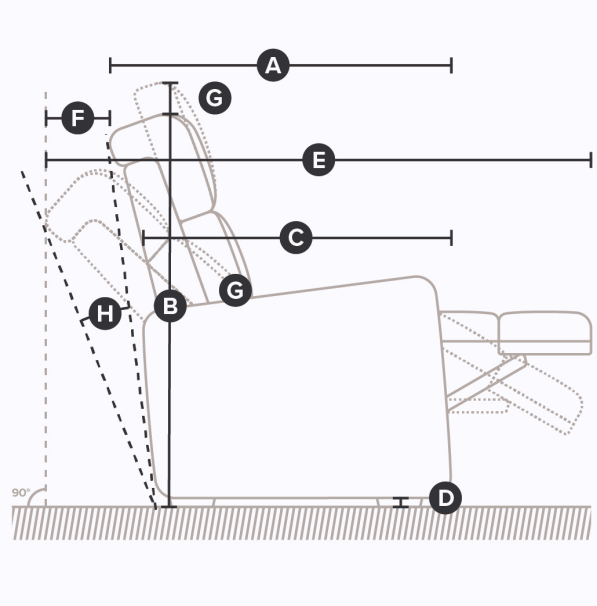

Side

All measurements in inches (in).

SKU	Description	A. Depth	B. Height	C. Arm Depth	C.. Seat Depth	D. Ground Clearance
77651-01	Sofa	40.0	33.0	40.0	23.5	0.8
77651-02	Chair	40.0	33.0	40.0	23.5	0.8
77651-03	Loveseat	40.0	33.0	40.0	23.5	0.8
77651-04	Ottoman	21.7	16.0	40.0		0.8
77651-10	Armless Chair	40.0	33.0	40.0	23.5	0.8
77651-11	Square Corner	39.0	33.0	40.0	23.5	0.8
77651-15	Right-Hand Facing Chaise	64.0	33.0	40.0	51.0	0.8
77651-16	Left-Hand Facing Chaise	64.0	33.0	40.0	51.0	0.8
77651-19	Right-Hand Facing Bumper	40.0	33.0	40.0	23.5	0.8
77651-20	Left-Hand Facing Bumper	40.0	33.0		23.5	0.8
77651-33	Swivel Chair	40.0	33.0		23.5	0.8
77651-39	Left-Hand Facing Sofa Split	40.0	33.0	40.0	23.5	0.8
77651-40	Right-Hand Facing Sofa Split	40.0	33.0	40.0	23.5	0.8
77651-4T	Storage Ottoman with Table	36.0	16.0	40.0		0.8
77651-63	Storage Ottoman	36.0	16.0	40.0		0.8
77651-81	Finished Armless Chair	40.0	33.0	40.0	23.5	0.8
77651-88	Left-Hand Facing Chair	40.0	33.0	40.0	23.5	0.8
77651-89	Right-Hand Facing Chair	40.0	33.0	40.0	23.5	0.8
77651-90	Armless Apartment Sofa	40.0	33.0	40.0	23.5	0.8
77651-91	Apartment Sofa	40.0	33.0	40.0	23.5	0.8
77651-92	Left-Hand Facing Apartment Sofa	40.0	33.0	40.0	23.5	0.8
77651-93	Right-Hand Facing Apartment Sofa	40.0	33.0	40.0	23.5	0.8
77651-9W	Curved Corner	48.0	33.0	40.0	23.5	0.8
77651-A1	Grande Sofa	40.0	33.0	40.0	23.5	0.8
77651-D1	2 Seat Sofa	40.0	33.0	40.0	23.5	0.8
77651-G1	Finished Armless Swivel Chair	40.0	33.0		23.5	0.8

*Select pieces from this collection are available in pattern-matched accent covers. Pattern matching ensures the pattern is consistent throughout the piece and matches at seams, and over arms and backs, creating a continuous pattern.
Dimensions shown as Width x Depth x Height. Dimensions are correct at the time of printing and are subject to change without notice. Actual measurements for each item may vary. Please allow up to a +/- 1 inch or 3 centimeter difference.

PALLISER

MADISON TRACK ARM

77651

DIMENSIONS

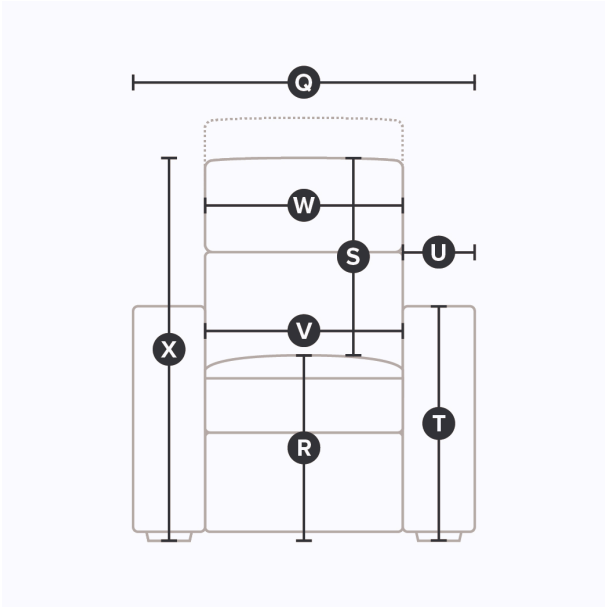

Front

All measurements in inches (in).

SKU	Description	Q. Width	R. Seat Height From Floor	S. Height Of Back From Seat	T. Arm Height From Floor	V. Width Between Arms
77651-01	Sofa	88.0	18.5	5.7	25.5	75.0
77651-02	Chair	38.0	18.5	5.7	25.5	25.0
77651-03	Loveseat	63.0	18.5	5.7	25.5	50.0
77651-04	Ottoman	32.0		6.3		
77651-10	Armless Chair	32.0	18.5	5.7		
77651-11	Square Corner	39.0	18.5	5.7		
77651-15	Right-Hand Facing Chaise	38.5	18.5	5.7	25.5	
77651-16	Left-Hand Facing Chaise	38.5	18.5	5.7	25.5	
77651-19	Right-Hand Facing Bumper	60.0	18.5	5.7		
77651-20	Left-Hand Facing Bumper	60.0	18.5	5.7		
77651-33	Swivel Chair	38.0	18.5	5.7	25.5	25.0
77651-39	Left-Hand Facing Sofa Split	109.5	18.5	5.7	25.5	
77651-40	Right-Hand Facing Sofa Split	109.5	18.5	5.7	25.5	
77651-4T	Storage Ottoman with Table	46.0		6.3		
77651-63	Storage Ottoman	46.0		6.3		
77651-81	Finished Armless Chair	32.0	18.5	5.7		
77651-88	Left-Hand Facing Chair	38.5	18.5	5.7	25.5	
77651-89	Right-Hand Facing Chair	38.5	18.5	5.7	25.5	
77651-90	Armless Apartment Sofa	64.0	18.5	5.7		
77651-91	Apartment Sofa	77.0	18.5	5.7	25.5	64.0
77651-92	Left-Hand Facing Apartment Sofa	70.5	18.5	5.7	25.5	
77651-93	Right-Hand Facing Apartment Sofa	70.5	18.5	5.7	25.5	
77651-9W	Curved Corner	48.0	18.5	5.7	25.5	66.1
77651-A1	Grande Sofa	109.0	18.5	5.7	25.5	96.0
77651-D1	2 Seat Sofa	88.0	18.5	5.7	25.5	75.0
77651-G1	Finished Armless Swivel Chair	32.0	18.5	5.7		

*Select pieces from this collection are available in pattern-matched accent covers. Pattern matching ensures the pattern is consistent throughout the piece and matches at seams, and over arms and backs, creating a continuous pattern.
Dimensions shown as Width x Depth x Height. Dimensions are correct at the time of printing and are subject to change without notice. Actual measurements for each item may vary. Please allow up to a +/- 1 inch or 3 centimeter difference.

PALLISER