

ALASKA

41070

Perfect for relaxing with the family, the Alaska offers deep, plush seats designed to sink into for extreme comfort. Contemporary styling and features like a power headrest and footrest come together in the handsome Alaska to provide personalized comfort. Alaska's box border chaise seating includes blown-fiber back cushions, and high-resiliency foam seating for lasting support. The power headrest and recline functions are easily managed using a sleek activation switch that includes USB charging. Fully padded foam arm pillows take comfort to the next level, creating a comfortable surface for lounging. Opt for a grounded finish with a solid wood leg, or amplify Alaska's style with a sleek metallic leg. Bring the Alaska into your favourite entertainment areas, and revel in home seating designed with your enjoyment in mind.

PALLISER

ALASKA

41070

Note: Icon images are for illustrative purposes only and may not be an exact representation of the product. Please refer to the product photography for the most accurate representation.
Inside Arm (IA): Refers to the distance between the arms.

STANDALONE PIECES



31 Wallhugger Power Recliner w/ Power Headrest

46 x 40 x 41"
117 x 102 x 103 cm
IA: 20" / 51 cm



61 Sofa Power Recliner w/ Power Headrest

94 x 40 x 41"
237 x 102 x 103 cm
IA: 68" / 171 cm



63 Loveseat Power Recliner w/ Power Headrest

70 x 40 x 41"
178 x 102 x 103 cm
IA: 45" / 113 cm

*Select pieces from this collection are available in pattern-matched accent covers. Pattern matching ensures the pattern is consistent throughout the piece and matches at seams, and over arms and backs, creating a continuous pattern.
Dimensions shown as Width x Depth x Height. Dimensions are correct at the time of printing and are subject to change without notice. Actual measurements for each item may vary. Please allow up to a +/- 1 inch or 3 centimeter difference.

PALLISER

ALASKA

41070

STANDARD FUNCTIONS

- Power recline and power headrest with brushed metal switch and USB charging

FRAME

- All Palliser frames are constructed from engineered wood products, hardwood or softwood; joints are pinned and glued for uniformity and strength.

CHOOSE YOUR ACESSORIES

- Extra Black Tray Table
- LED Flex Light
- Tablet Holder
- Extra Metal Tray Table
- Wine Glass Holder
- Battery Y-Cable

CHOOSE YOUR LEG OPTION

- Bright Chrome Leg
- Espresso Wood Leg

CHOOSE YOUR COVER

- Fabrics, excluding Accent Fabrics
- Leather
- Leather Alternative
- Leather Match

SEATING

- Back cushions with fibre filling
- Full, chaise-style seat cushions with high-resiliency, high density foam core in polyester wrap
- Back Suspension: 100% premium elastic webbing to provide consistent comfort and support.
- Seat Suspension: 100% premium elastic webbing, engineered to provide consistent comfort and endurance.

*Select pieces from this collection are available in pattern-matched accent covers. Pattern matching ensures the pattern is consistent throughout the piece and matches at seams, and over arms and backs, creating a continuous pattern.
Dimensions shown as Width x Depth x Height. Dimensions are correct at the time of printing and are subject to change without notice. Actual measurements for each item may vary. Please allow up to a +/- 1 inch or 3 centimeter difference.

PALLISER

ALASKA

41070

DIMENSIONS

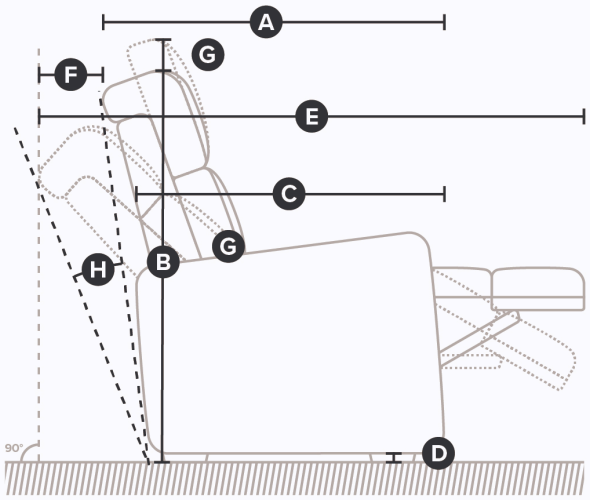

Side

All measurements in inches (in).

SKU	Description	A. Depth	B. Height	C. Arm Depth	C.. Seat Depth	D. Ground Clearance	E. Full Recline Depth	F. Wall Clearance	G. Headrest Extension
41070-31	Power Wallhugger Recliner	39.8	40.2	39.0	21.5	2.0	64.4	7.0	4.3
41070-61	Power Reclining Sofa	39.8	40.2	39.0	21.5	2.0	64.4		
41070-63	Power Reclining Loveseat	39.8	40.2	39.0	21.5	2.0	64.4	7.0	4.3

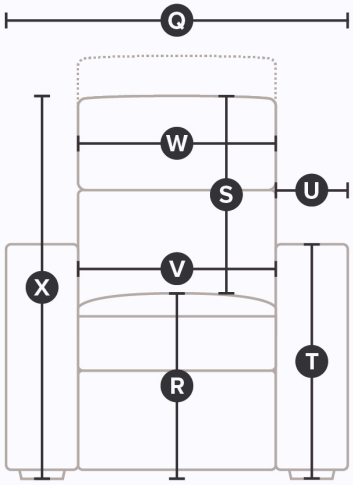

Front

All measurements in inches (in).

SKU	Description	Q. Width	R. Seat Height From Floor	S. Height Of Back From Seat	T. Arm Height From Floor	U. Arm Width	V. Width Between Arms
41070-31	Power Wallhugger Recliner	46.0	19.7	23.2	26.4	31.5	19.7
41070-61	Power Reclining Sofa	93.3	19.7	23.2	26.4	31.5	67.3
41070-63	Power Reclining Loveseat	69.7	19.7	23.2	26.4	31.5	44.1

*Select pieces from this collection are available in pattern-matched accent covers. Pattern matching ensures the pattern is consistent throughout the piece and matches at seams, and over arms and backs, creating a continuous pattern.
Dimensions shown as Width x Depth x Height. Dimensions are correct at the time of printing and are subject to change without notice. Actual measurements for each item may vary. Please allow up to a +/- 1 inch or 3 centimeter difference.

PALLISER